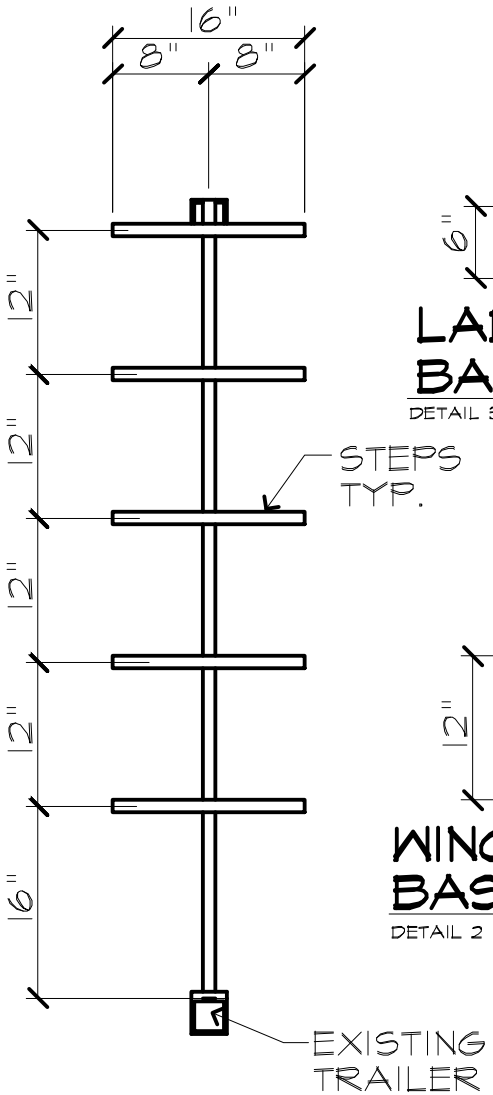

LADDER

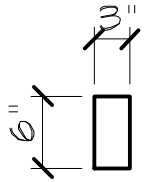

LADDER BASE

DETAIL 3

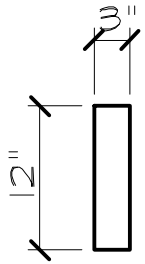

WINCH BASE

DETAIL 2

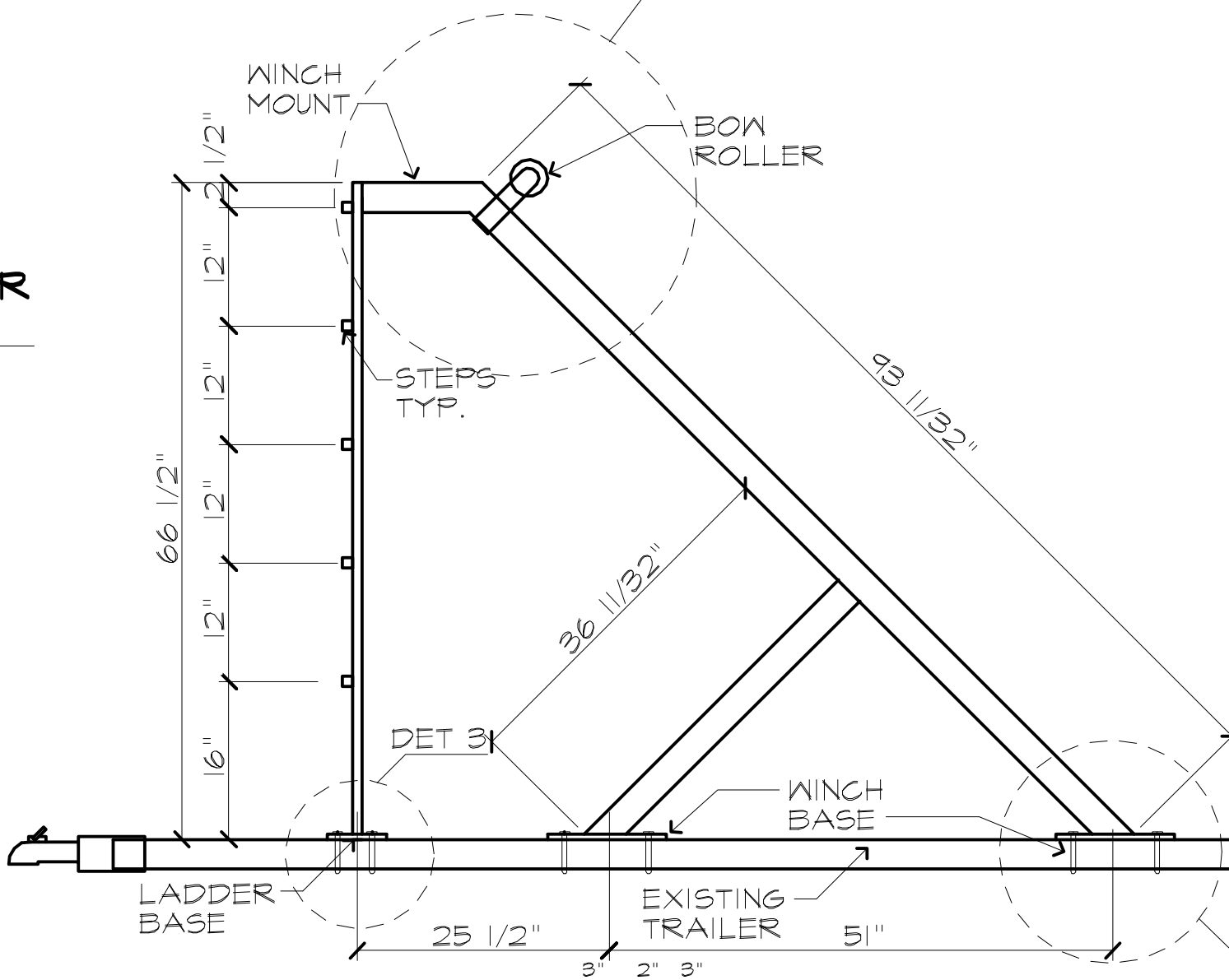

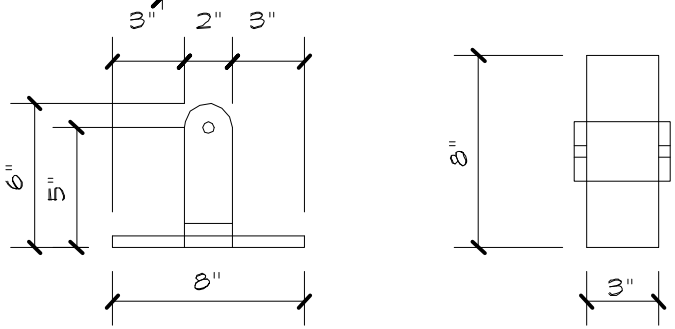

SIDE VIEW

TOP VIEW

BOW ROLLER

1/4" MATERIAL

MATERIAL

TRAILER - 3X3X1/4"
BOW WINCH POST - 3X3X1/4
LADDER STEPS 1" OF 1/2" ROUND OR SQUARE
BASE PLATES 1/2" MATERIAL